System Configuration

Focus manual control

Zoom servo control

2/3" zoom lens

Shoulder belt

Microphone

Headphone

Wireless receiver EK 6042 (Senheiser) SRc (Lectronics)

Network Equipment

USB Network adapter

LAN cable

Switcher, Monitor, etc.

Monitor

SDI cable BNC

Composite cable BNC

HDMI cable

Audio cable XLR

GY-HC900CH/CHU/CHE/CHEC

Provided EVF

Lens Supporter

Tripod base KA-551U

Tripod

Standard battery mount
GY-HC900CHU: Anton Bauer
GY-HC900CH/CHE/CHEC: IDX

Note: E model requires the optional Anton Bauer battery plate when using Anton Bauer battery.

Battery (Anton Bauer)

Battery charger (Anton Bauer)

Battery (IDX)

Battery charger (IDX)

AC adapter Titan70 (Anton Bauer)

Optional EVF/ Third party's EVF (Option)

LCD Studio Viewfinder

RM-LP20G

Remote Control Unit RM-LP25U

SDHC/SDXC Memory Card

SD Card Reader

Fiber Camera Unit FS-900CAM/ KA-F790

Headset

Composite Video Out for Teleprompter

Power Wafer
KA-PW790AG (A/B gold mount)
KA-PW790VG (V mount)

Headset

Camera Remote Interface Cable VC-P790RMG

Fiber Cable

Fiber Camera Remote Control Unit FS-900BS/RM-FP790

RTS/Clear-Com Interface

AC Adapter
AA-FP790G (for RM-FP790TNRG/TNCG)

Dimensions
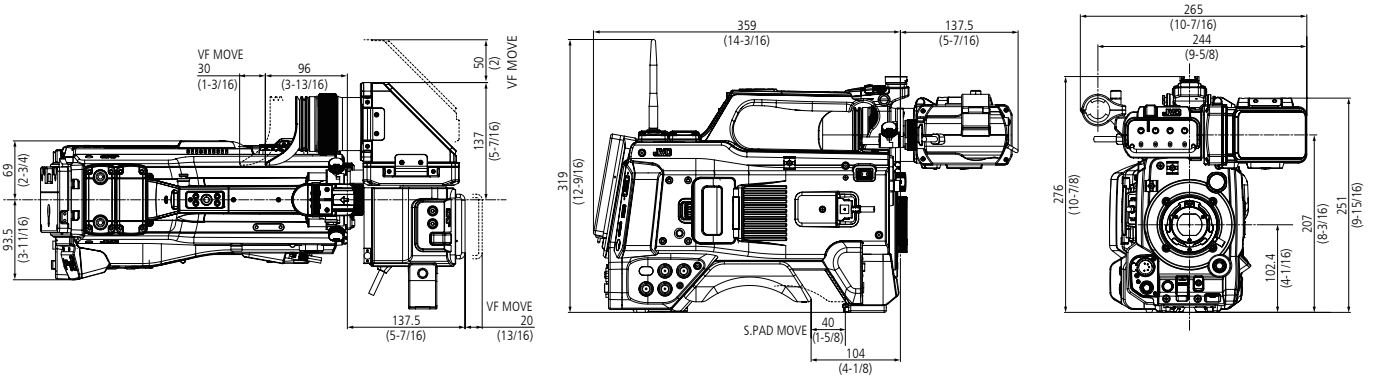
Unit: mm (inch)